*Note: Specficiations are subject to change without notice. Always consult factory.*

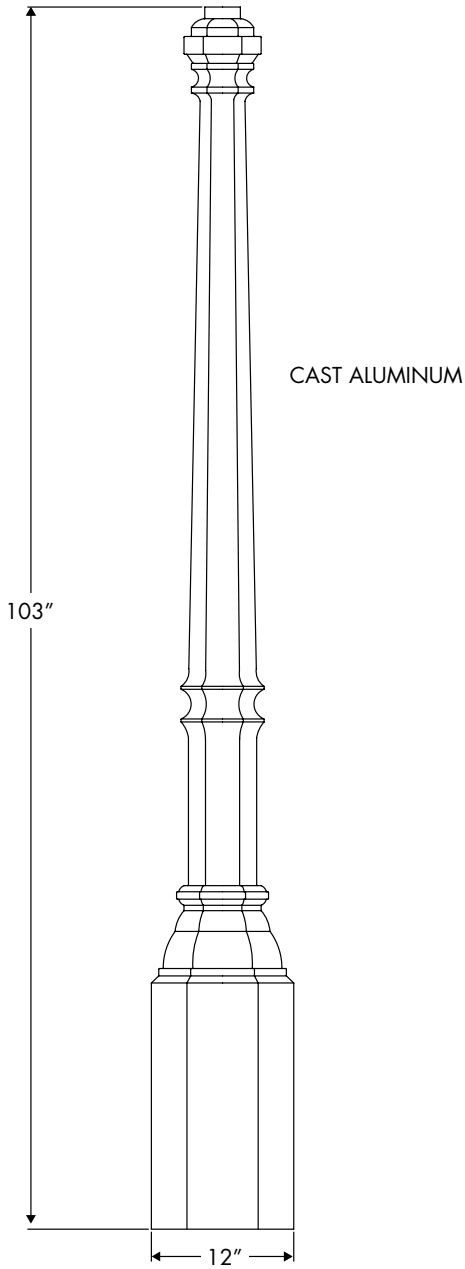


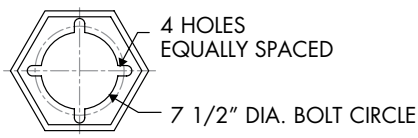


**P-6048 BASE**

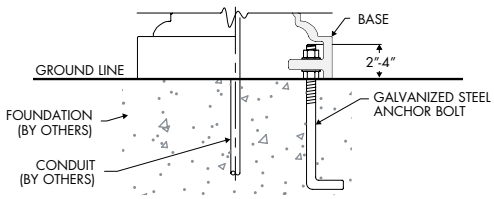


***Mounting Bolt Conditions with a Pole Base***
*(Basic Example)*

***Maximum Pole Heights and Shaft types differ per project.***
Pole shafts are normally determined by material loading specifications, location of project, and EPA requirements.
*Please contact factory.*


**Environmental Lighting for Architecture, Inc.**
17891 Arenth Avenue, City of Industry, CA 91748-1197
626.965.0821 • 800.423.6561 • fax 626.965.9494
www.ela-lighting.com